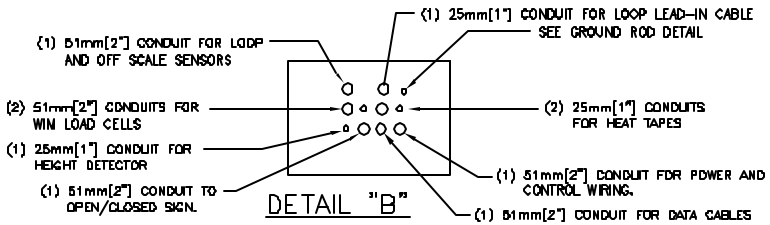

DETAIL "B"

NOTE: CONDUIT PLACEMENTS SHOWN ARE SUGGESTED ONLY. MAY BE ARRANGED ACCORDING TO SITE REQUIREMENTS.

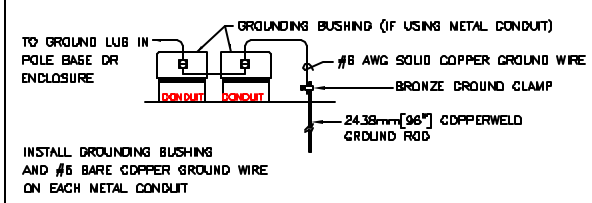

TYPICAL GROUNDING DETAIL

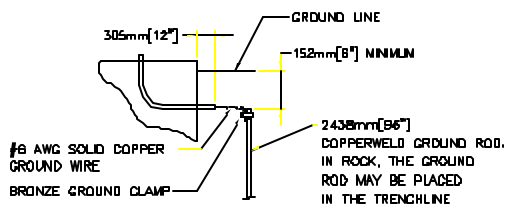

GROUND ROD DETAIL

INSTALLATION NOTES:

1. THE CONDUITS FROM THE WIM SCALE FRAME TO THE WIM ENCLOSURE SHOULD BE RUN AS STRAIGHT AS POSSIBLE TO FACILITATE FUTURE REPLACEMENT OF A LOAD CELL.
2. CONDUIT ROUTINGS SHOWN ON THIS DRAWING ARE SUGGESTED ONLY.

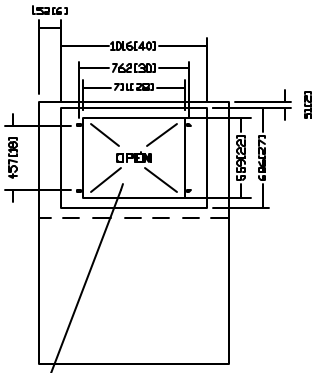

ALL CONDUIT ENTERS ENCLOSURE IN THIS 558mm x 711mm [22"x28"] AREA. SEE DETAIL "B".

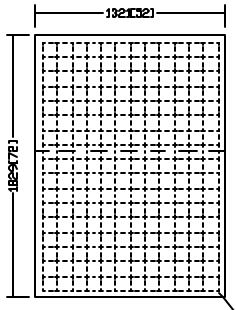

REINFORCING WIRE MESH
102mm X 102mm [4"x4"]-w2.9xw2.9

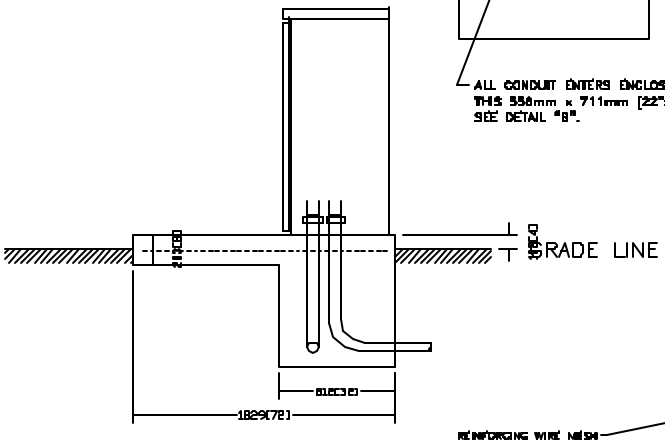

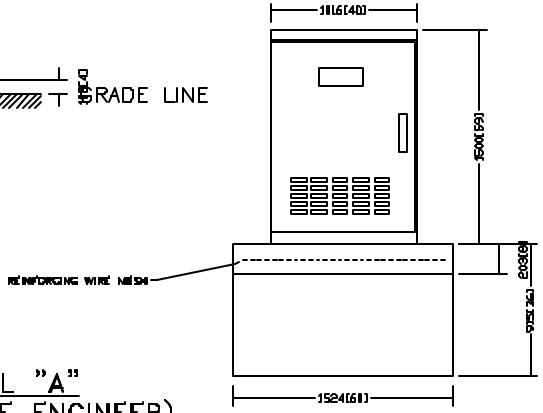

FOUNDATION DETAIL "A"
(OR AS DIRECTED BY SITE ENGINEER)

DIMENSIONS ARE MILLIMETERS[INCHES].

METTLER TOLEDO

90E199R